Model 2710 SuperMITT I3C/I²C Test Tool

The Model 2710 SuperMITT is a test tool for validating hardware and software for simple peripheral buses. The tool is based on the Customized FPGA development board, With the help of custom firmware and bus-specific adapter boards, the SuperMITT performs an end-to-end verification test.

- Works with Model 2712 to support I3C / I²C.
- Configurable for 1.2V, 1.8V and 3.3V logic levels.
- Allows for configurable pull-up resistors, ensuring flexibility for different bus setups.
- The Model 2710 package includes a Model 2712 spare PHY card for added versatility and extended testing capabilities.

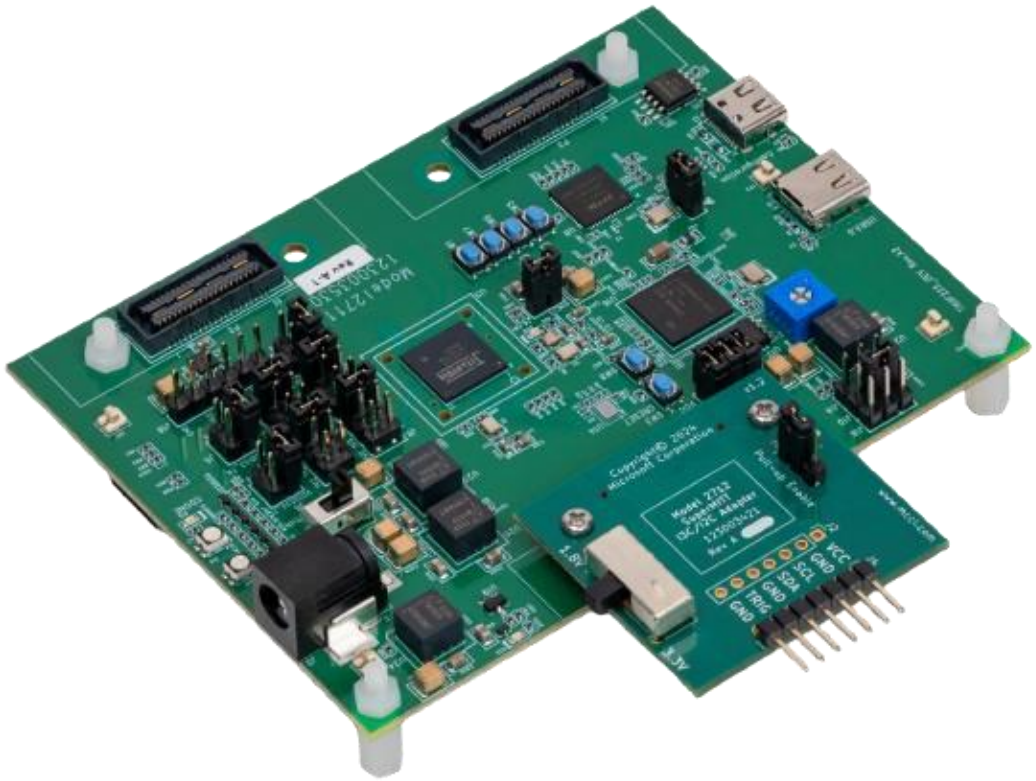

Applications

- **Peripheral Bus Validation:**
  Ideal for testing I²C and I3C bus implementations in embedded systems
- **Firmware Debugging:**
  Supports comprehensive debugging of firmware for I²C and I3C devices
- **End-to-End System Testing:**
  Ensures hardware and software integrity with extensive verification procedures
- Suitable for use in industrial automation, consumer electronics, and automotive applications.

Copyright © 2025 MCCI Corporation. MCCI® is a registered trademark of MCCI Corporation. I3C® is a registered trademark of the MIPI® Alliance. USB Type-C® is a registered trademark of USB Implementers Forum. EZ-USB™ FX3 is a trademark of Infineon Technologies AG. All other marks property of their respective owners. Document 971001103 rev A.

Block Diagram

The block diagram below illustrates the main components of the Model 2710 SuperMITT and their interconnections.

Figure 1 Block diagram

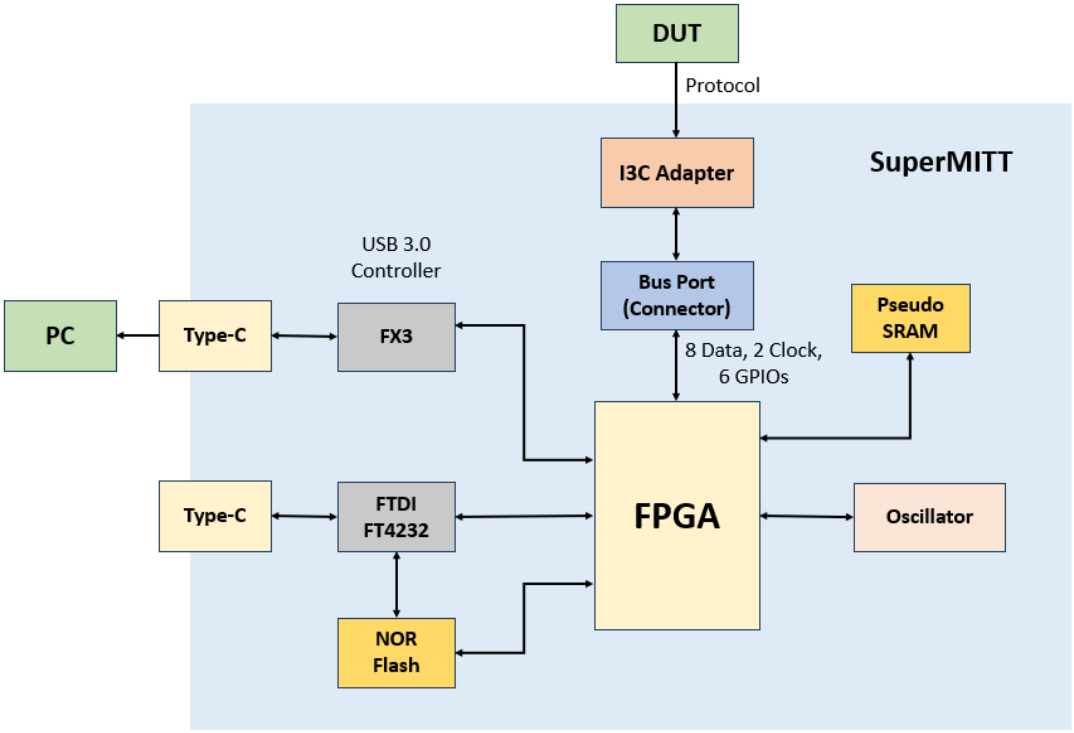

Specifications

FPGA	Ti60 Field Programmable Gate Array (FPGA)
FX3	Infineon EZ-USB™ FX3 Peripheral Controller
Bus Support	I3C, I²C over I3C
Power	12VDC, 1.5A
USB (Type-C)	Used for configuring peripherals and capturing logs.
Firmware	All firmware is field upgradeable.

Price and Availability

The Model 2710 is available from stock from MCCI's online store, https://mcci.io/buy-2710. For more information, please contact MCCI at sales@mcci.com.

Copyright © 2025 MCCI Corporation. MCCI® is a registered trademark of MCCI Corporation. I3C® is a registered trademark of the MIPI® Alliance. USB Type-C® is a registered trademark of USB Implementers Forum. EZ-USB™ FX3 is a trademark of Infineon Technologies AG. All other marks property of their respective owners. Document 971001103 rev A.