Model 3421 USB Basic Display Protocol (BDP) Test Device



The MCCI® Model 3421 is a versatile USB-to-HDMI converter designed to operate with the Basic Display Protocol (BDP), based on the USB/VESA joint specification. It serves as a reference device for testing host drivers implementing the BDP specification.

The Basic Display Protocol (BDP) is available to VESA members. More information can be found at the VESA website: https://vesa.org/vesa-standards.

It features a USB 3.2 Gen 2 USB-C® port to receive video data from the host computer, a Micro HDMI port to drive an external display, and a USB micro-B port for control and diagnostics.

For Operation as a BDP device on Windows® 10 and Windows 11, the Model 3421 requires a custom BDP driver, which is supplied by Synaptics. MCCI helps customers in acquiring and setting up the necessary drivers.

Block diagram

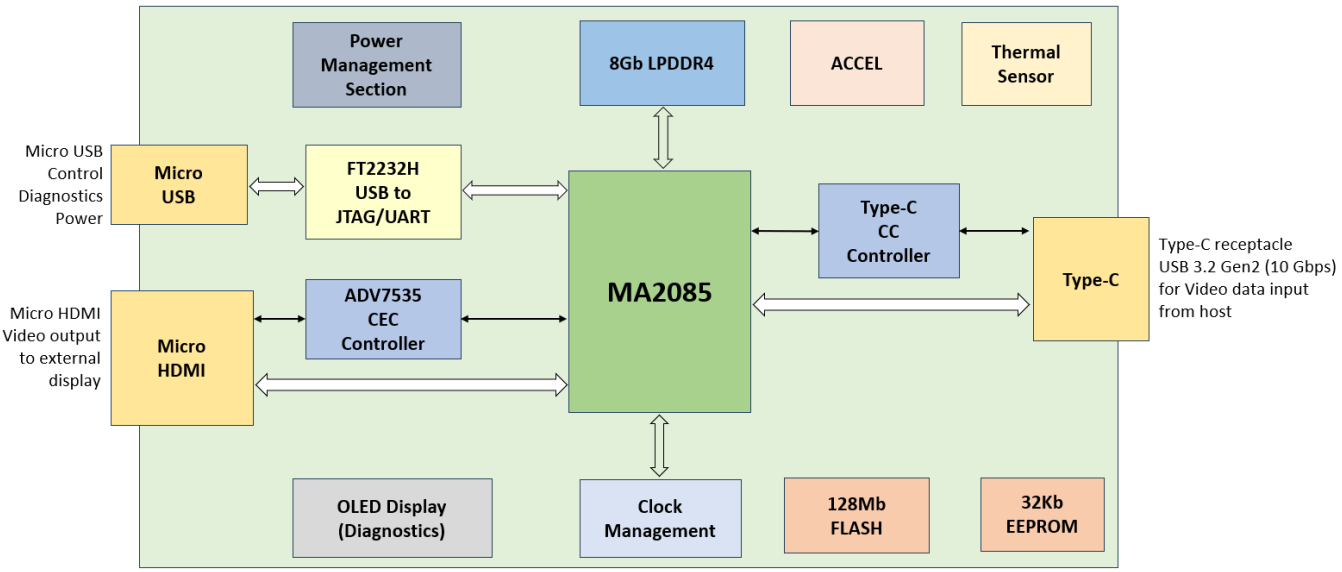

Model 3421 USB-BDP Test Device

Specifications

CPU	Movidius MA2085 at 800 MHz
RAM	1 gigabyte LPDDR4 DRAM
Flash	16-megabyte SPI flash
EEPROM	4 Kbytes
USB-C port	Upstream facing, bus powered or self-powered device. 10 Gbps signaling. Backward compatible for testing USB 3.2 Gen 1, high speed and full speed host ports. Default pipe plus up to 4 endpoints in each direction.

Copyright © 2026 MCCI Corporation. MCCI is a registered trademark of MCCI Corporation. USB Type-C, USB-C, and USB4 are registered trademarks of the USB Implementers Forum. HDMI is a registered trademark of HDMI Licensing Administrator, Inc. Windows is a registered trademark of Microsoft Corporation. All other trademarks are the property of their respective owners. Document 971001102 Rev B.

Micro HDMI	Enables the Windows machine's display to be extended onto an external monitor. It supports the transmission of video content, which allows the external monitor to display videos played through the Model 3421. Output resolution is 1920 by 1080 (Full HD).
Firmware	MCCI Basic Display Protocol firmware
System Control Software	Running on a separate control PC, a Python-based test suite allows remote control of optional features of 3421.
Micro-B port	Multi-function debug control port, bus powered, high-speed USB. No drivers are required on Windows 10 or Linux. Serial port interfaces to MCCI firmware to control personality of Model 3421 and drive test scenarios.
On-board Sensors	Accelerometer for controlling screen organization, thermal sensor for monitoring device temperature. High-side power monitor reports Vbus voltage and power consumption of device.
OLED display	64x48 0.71" OLED display for user feedback.
JTAG interface	Compatible with Movidius MDK tools, allows field software update and debugging.
Case	3.35" x 2.34" x 0.49", passive cooling
Power	5V, 1.5W typical

Case Dimensions

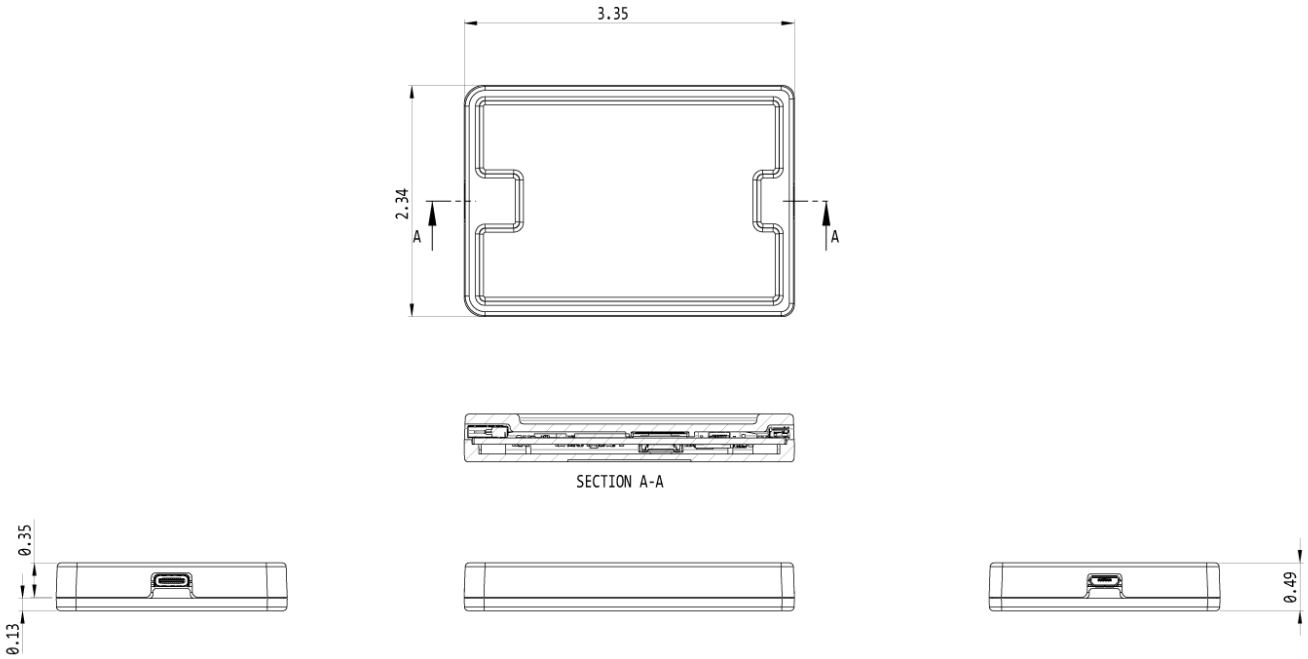

Price and Availability

The Model 3421 is available from stock from MCCI's online store, https://store.mcci.com/collections/usb-test-devices/products/model-3421-bdp. For more information, please contact MCCI at sales@mcci.com.